From the Monitoring of a Real Catalyst to the Catalyst Design

Marco Daturi

Laboratoire Catalyse et Spectrochimie, ENSICAEN, Université de Caen, CNRS, 6 Bd Maréchal Juin, F-14050 Caen, France

Our society is confronted to an epoch-making crisis, bearing contradictory and challenging requests: on one side, raw materials and energy sources are rarefying, on the other, populations call for a better quality of life and easy access to goods, especially in the developing countries. Answers to these demands necessarily go through a more efficient use of the natural and energetic resources, limiting waste and reducing pollutant emissions. Practically, this can be obtained using efficient catalytic processes designed for sustainable energy economy and/or for emission abatement. The time of catalysts formulation by empirical "trial and error" methods is already well behind us, while the use of screening methods have not been able to produce significant advances in catalyst discovery. Both academia and industry are convinced that in order to have an efficient catalyst design, a rational approach is necessary.

Real-time spectroscopy during reaction coupled to simultaneous activity measurements in a kinetically relevant cell (*operando* methodology) provides the insight for a knowledge-based catalyst design. The use of spectroscopic techniques during reaction monitoring uncover how a catalytic surface behaves and which are the relevant catalytic steps, active sites and reaction intermediates during a given process.[1,2] IR spectroscopy is a technique particularly adapted for understanding the mechanism of a catalytic reaction, being able to probe the surface mechanisms at the molecular level. Therefore, several examples will be presented to highlight the pertinence of the infrared tool in the characterization of a catalyst at work. The majority of them will deal with environmental relevant reactions, such as the exhaust catalytic control (particularly challenging to be studied, since the catalyst is submitted to extreme conditions, as in NOx-trap or SCR processes), or the VOC abatement (oxidation of oxygenated molecules). To discover the active sites and discriminate the intermediates, transient conditions are known to provide clear added value. To circumvent the problem of maintaining the real reaction conditions of the *operando* approach while simultaneously using transient parameters, the SSITKA methodology will be discussed, completed by thorough kinetic calculations.

The determination of kinetically relevant data requires that the chemical engineering aspects of *operando* reactors are fully considered: thermal, mechanical and fluid-dynamic constraints present in the industrial applications must be respected. Once the mechanism and actual working phase are established, the pathway to a successful formulation and improvement of catalytic systems is paved. While there has been significant progress in the assessment of catalysts in powder shape, there are additional constrains for shaped

catalysts, notably monoliths, where a large part of the processes are carried out. Therefore, the direct analysis of a monolithic catalyst during reaction is of paramount importance. Up to now, mainly the active phase in powder or pelletized form has been studied, eventually upon removal from the wash-coated device.[3-5] The results obtained in such a way are certainly informative, but they suffer from the loss of information due to casting removal/alteration and the lack of a truly relevant dynamic regime. Understanding the behaviour of surface species in real conformed catalysts during real catalytic operations is a paradigm shift towards a more rational development of future catalytic systems. When IR spectroscopy (one of the most advantageous for mechanistic studies) is used, measurements in transmission conditions are essentially necessary to provide quantitative information. Recently, we have demonstrated the feasibility of such an approach showing the possibility to record IR spectra of a cordierite-supported catalyst analysed by transmission and even monitoring a catalytic reaction inside a monolith using a newly conceived operando IR reactor-cell, providing academic and industrial relevant parameters such as intrinsic activity constants, mass transfer constants and efficiencies of the porous system as a function of operating parameters, such as temperature and fluid dynamic conditions.[6]

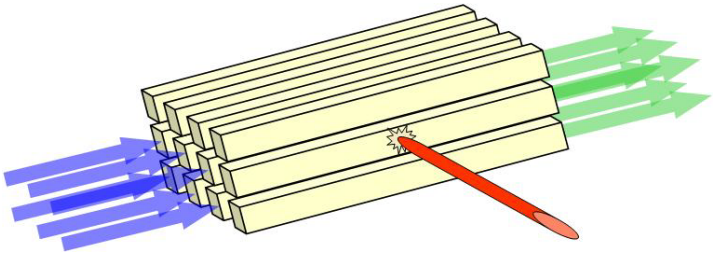

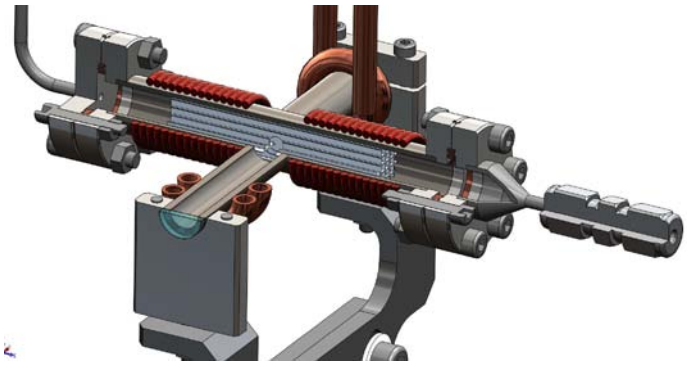

This methodological approach allows at investigating also other kinds of materials at work besides catalysts. For example, membranes and absorbers can be monitored both under the point of view of the guest molecules interacting with the functional sites and of the dynamic modifications induced in the hosting solid. Again, this is the first step leading to the design and synthesis of new generations of performing devices.

References

1 L. Karwacki, B.M. Weckhuysen, *PCCP*, 2011, **13**, 3681.
2 A. Vimont, F. Thibault-Starzyk, M. Daturi, *Chem. Soc. Rev.*, 2010, **39**, 4928.
3 P. Bazin, O. Marie, M. Daturi, in *Past and Present in DeNOx Catalysis: From Molecular Modelling to Chemical Engineering* (Eds. P. Granger, V.I. Pârvulescu), *SSSC* **171**, Elsevier, 2007, p. 97.
4 S. Rousseau, O. Marie, P. Bazin, M. Daturi, S. Verdier, V. Harlé, *J. Am. Chem. Soc.*, 2010, **132**, 10832.
5 I. Malpartida, O. Marie, P. Bazin, M. Daturi, X. Jeandel, *Appl. Catal. B: Environm.*, 2011, **102**, 190.
6 S.B. Rasmussen, M.A. Bañares, P. Bazin, J. Due-Hansen, P. Avila, M. Daturi, *PCCP*, 2012, **14**, 2171.